LGT8F328P Nano #09

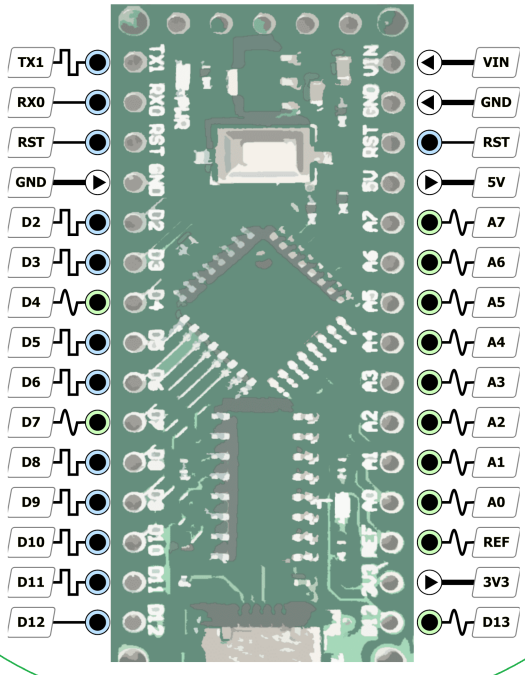

LGT8F328P Nano #10

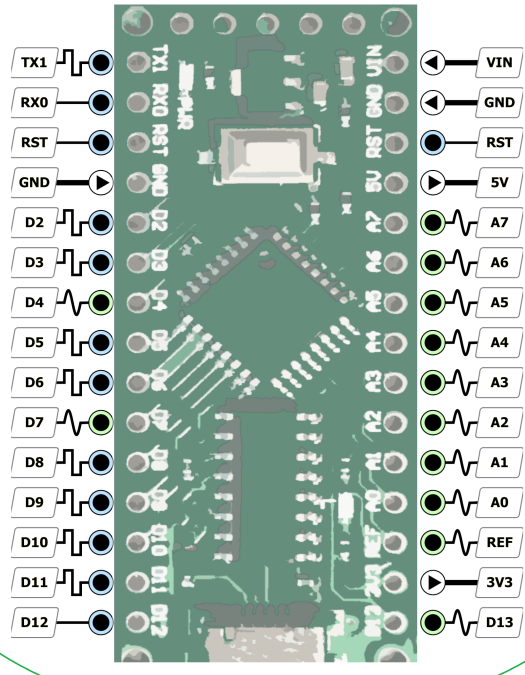

LGT8F328P Nano #11

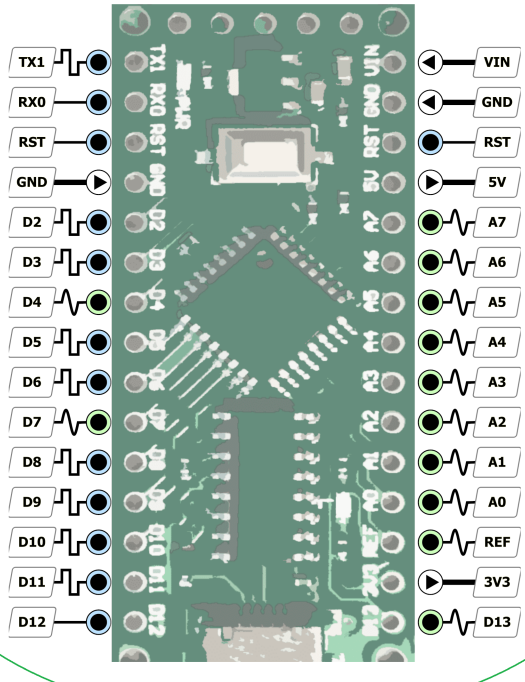
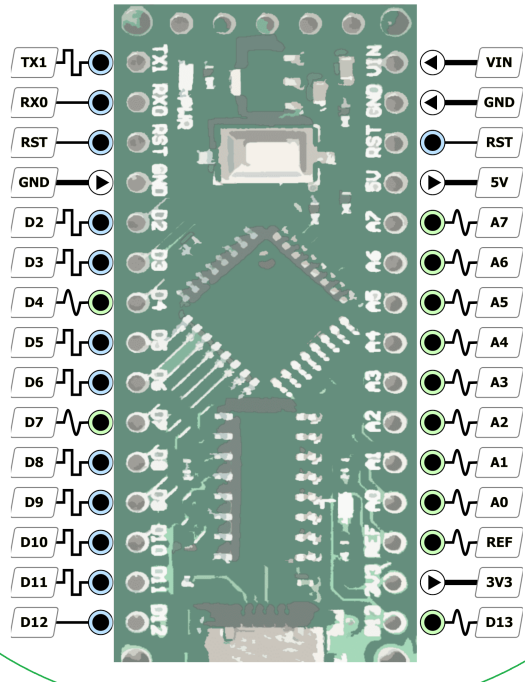
LGT8F328P Nano #12