LGT8F328P Nano #17

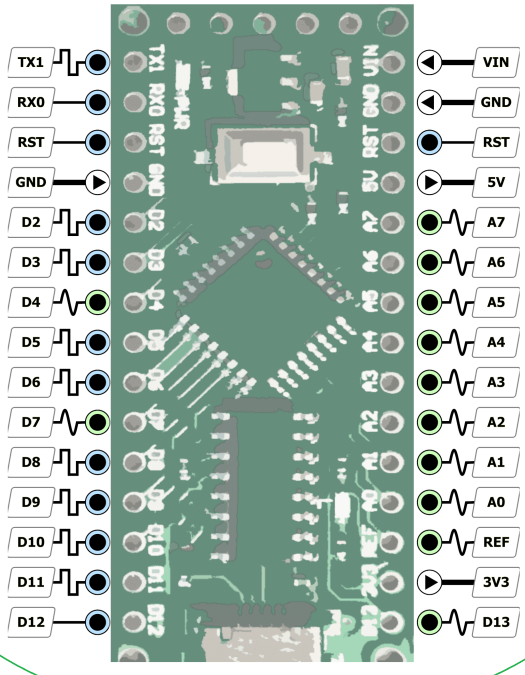

LGT8F328P Nano #18

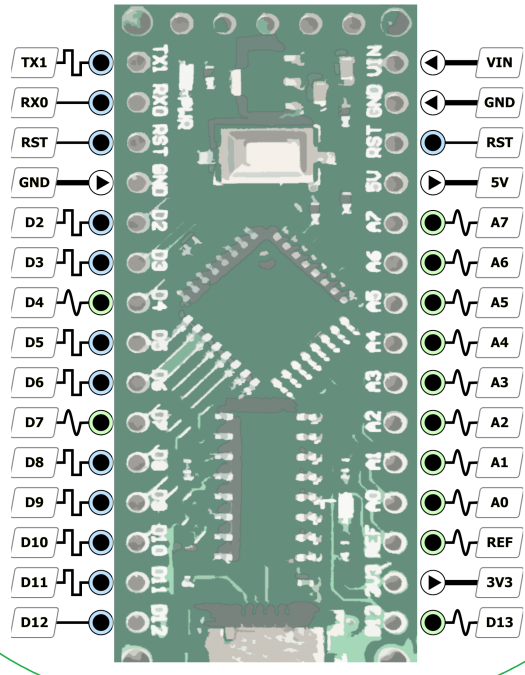

LGT8F328P Nano #19

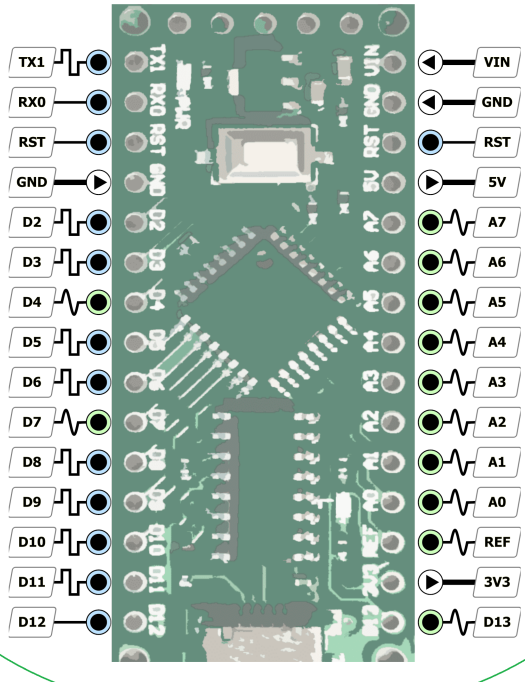
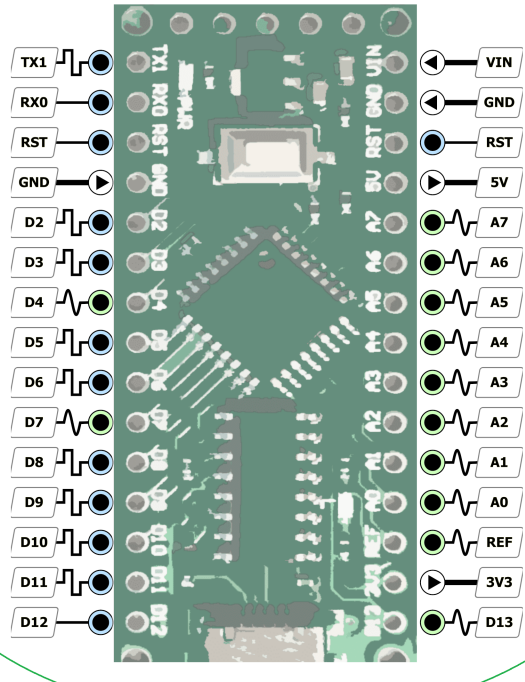
LGT8F328P Nano #20