LGT8F328P Nano #13

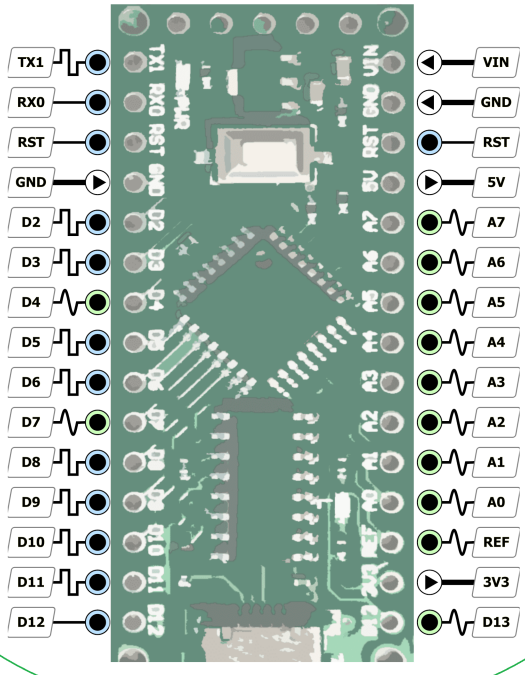

LGT8F328P Nano #14

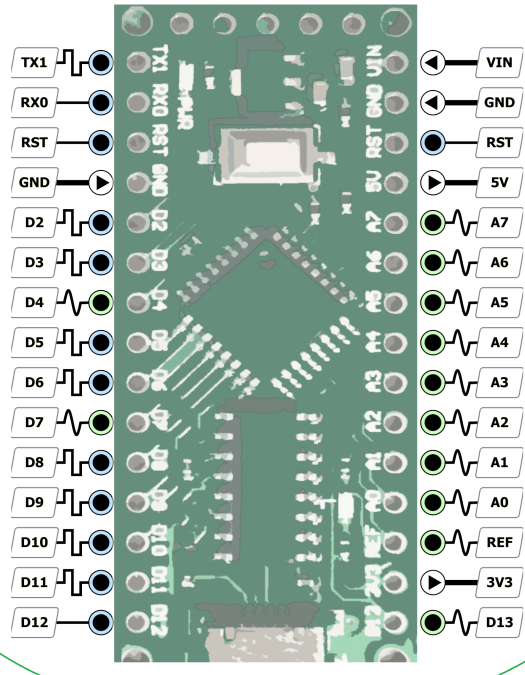

LGT8F328P Nano #15

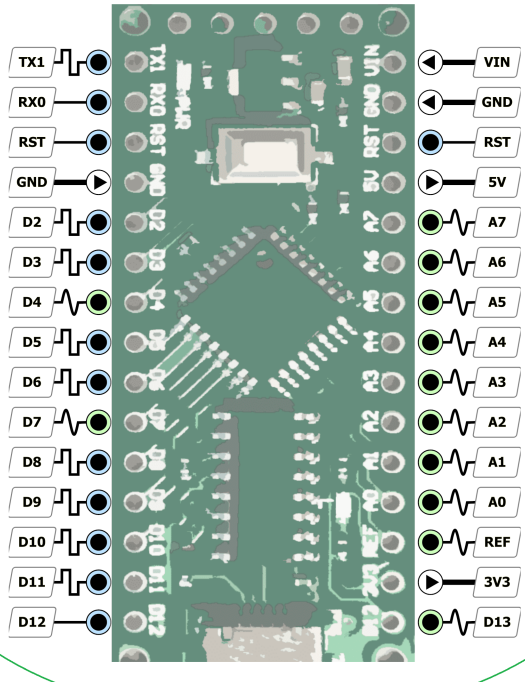
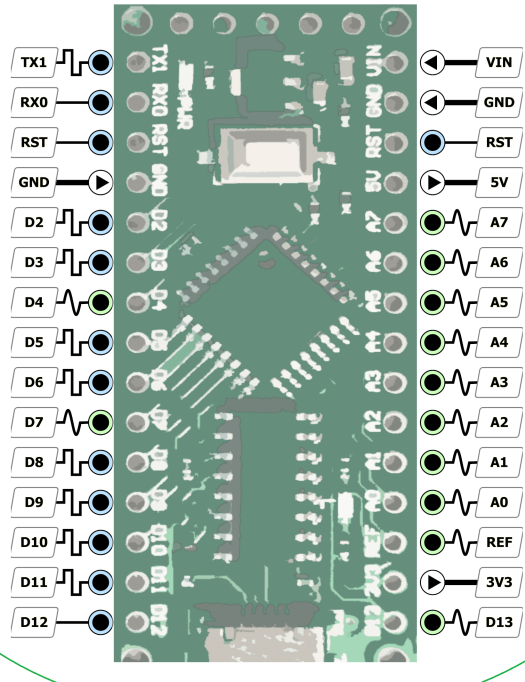
LGT8F328P Nano #16